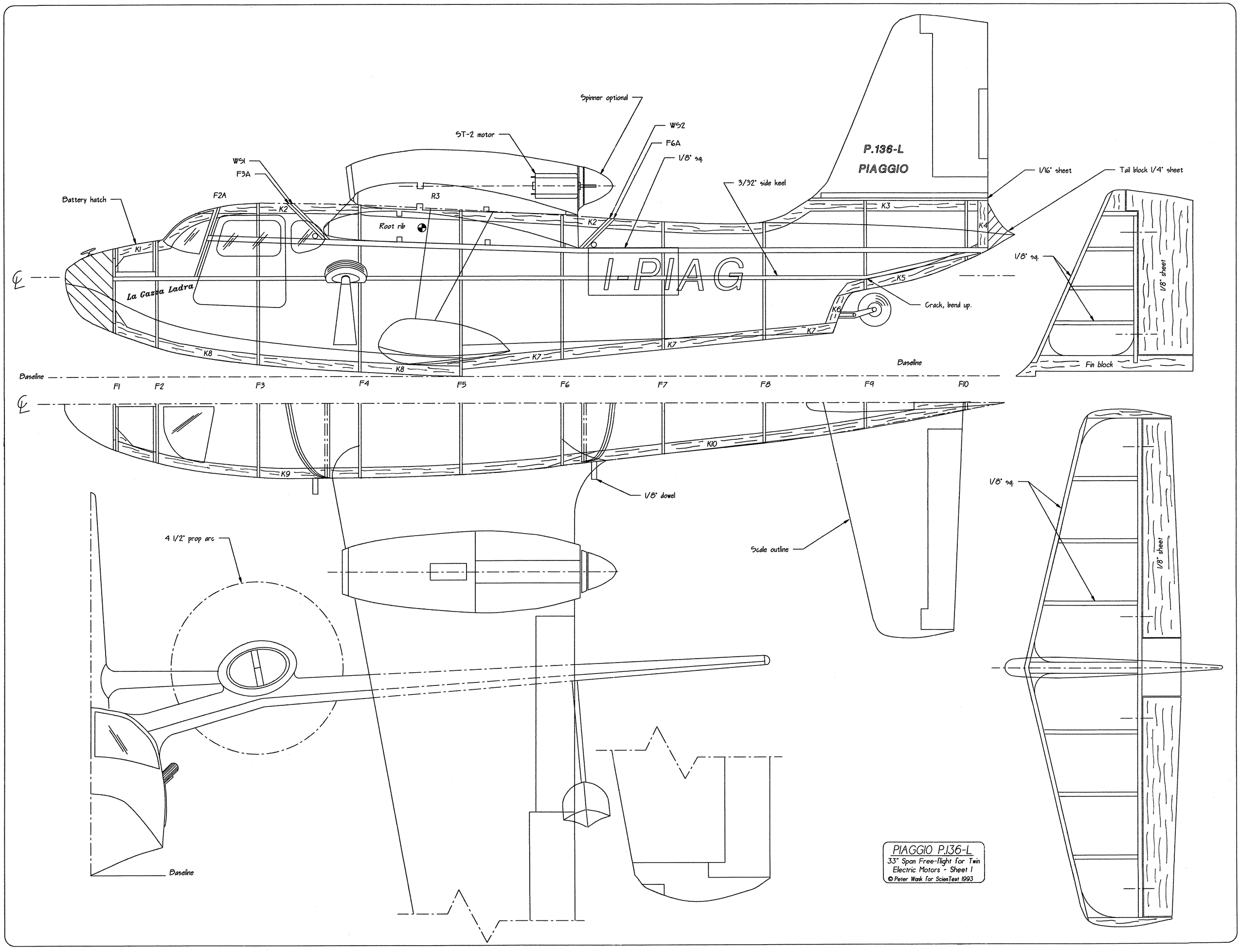

PIAGGIO P.136-L
33" Span Free-flight for Twin Electric Motors - Sheet 1
© Peter Wank for ScienText 1993

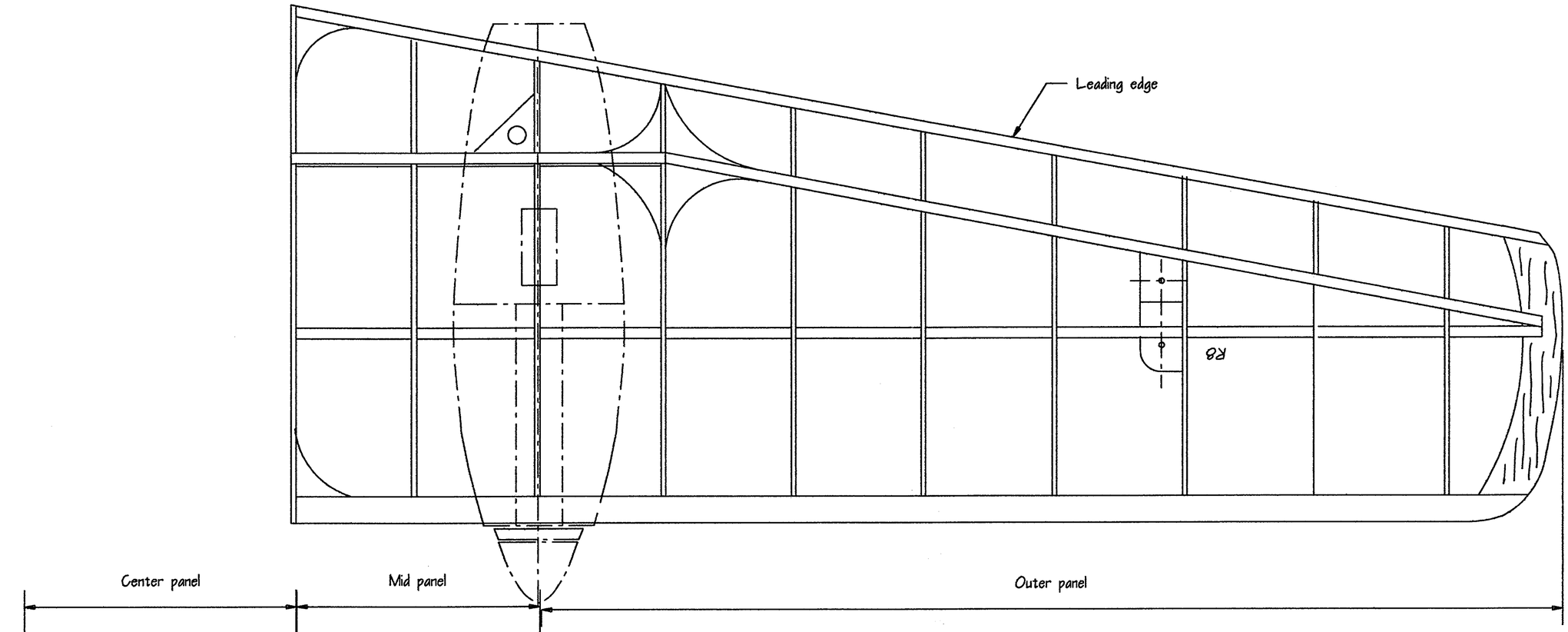

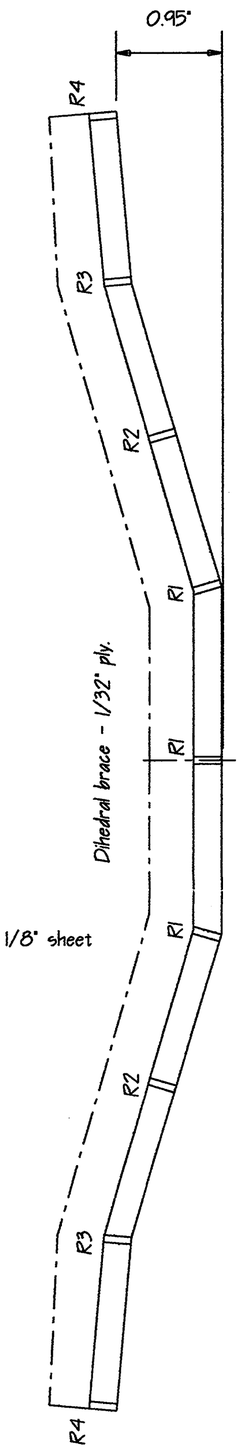

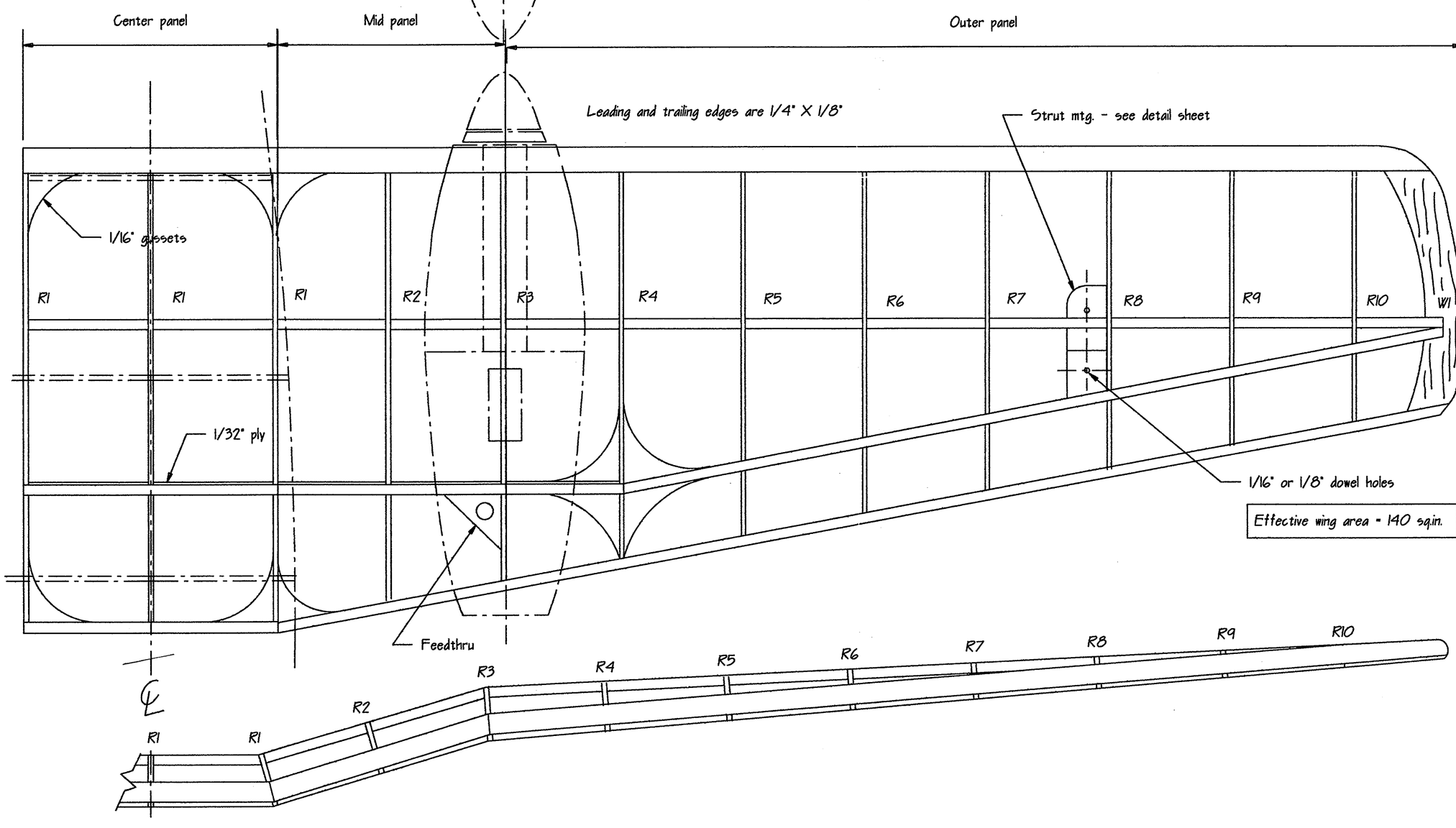

PIAGGIO P.136-L

33" Span Free-flight for Twin Electric Motors - Sheet 2

© Peter Wank for ScienText 1993

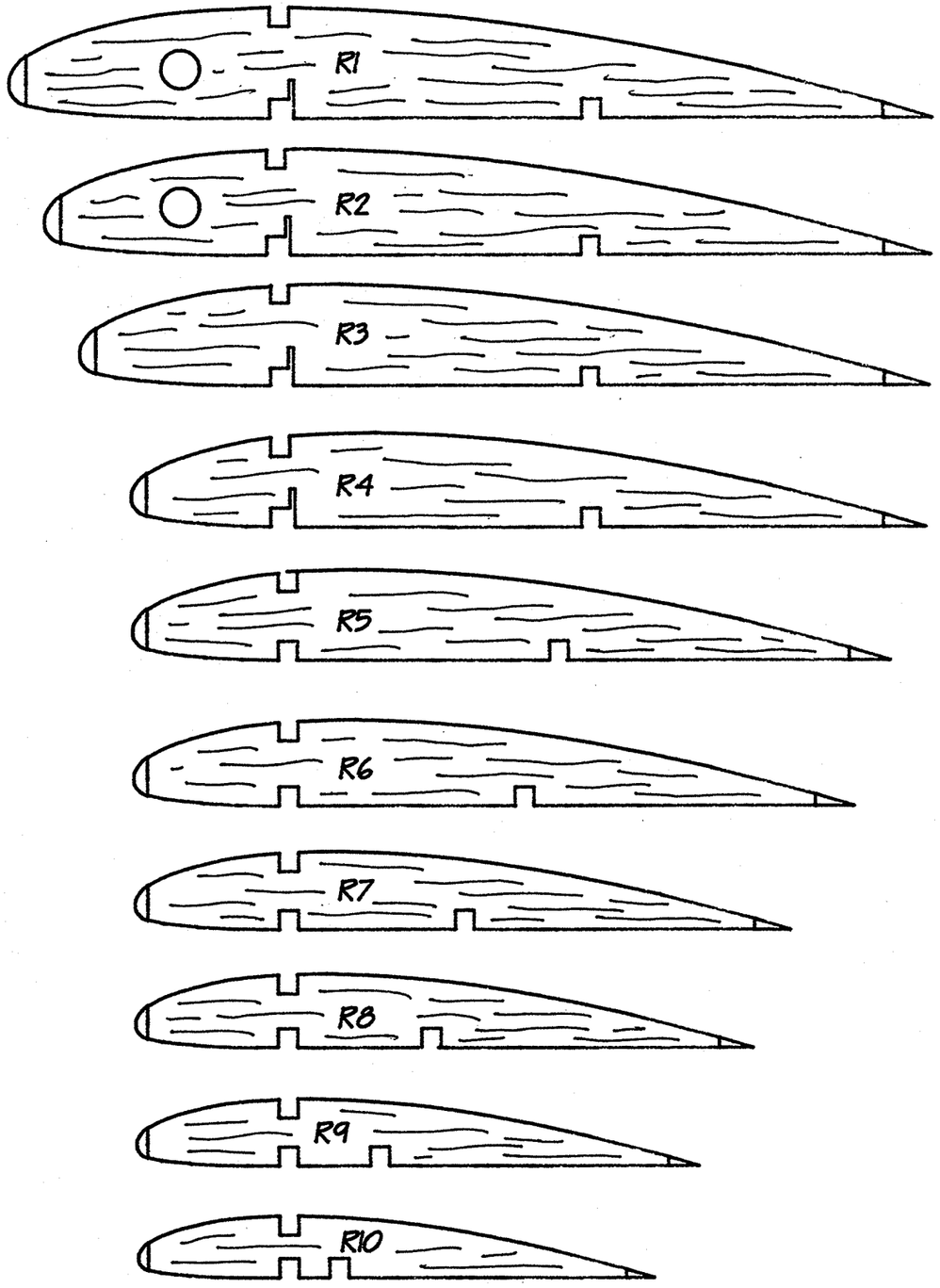

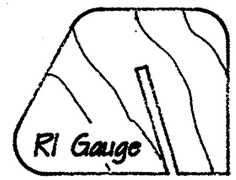

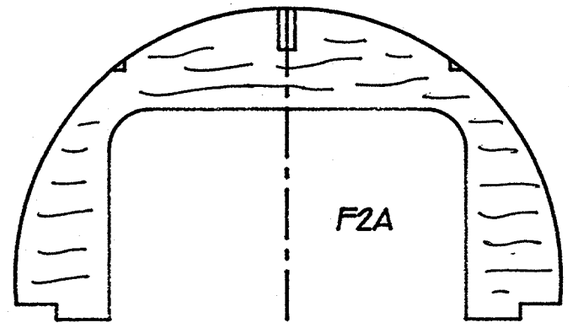

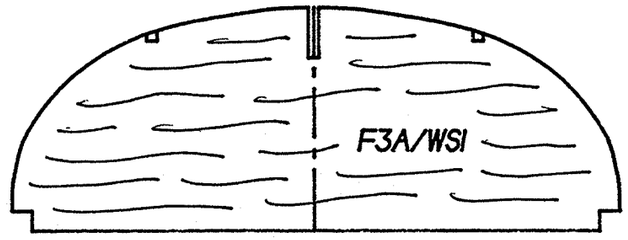

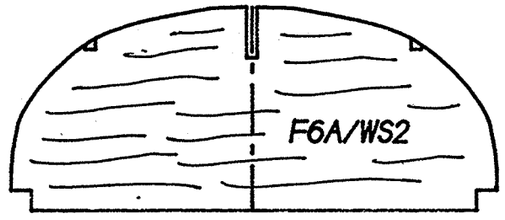

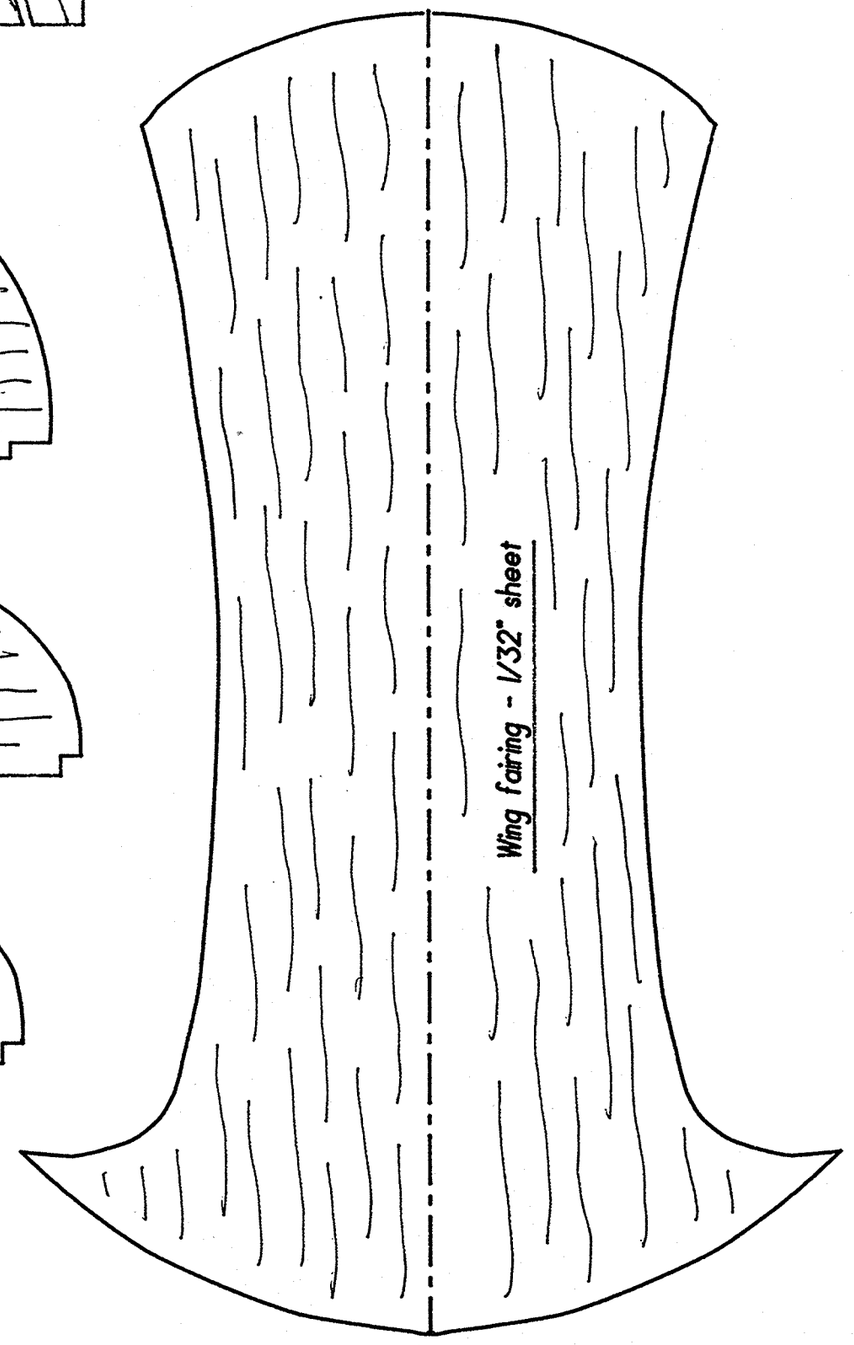

PIAGGIO P.136-L

33" Span Free-flight for Twin Electric Motors - Sheet 3

© Peter Wank for ScienText 1993

PIAGGIO P.136-L

33" Span Free-flight for Twin Electric Motors - Sheet 4

© Peter Wank for ScienText 1993

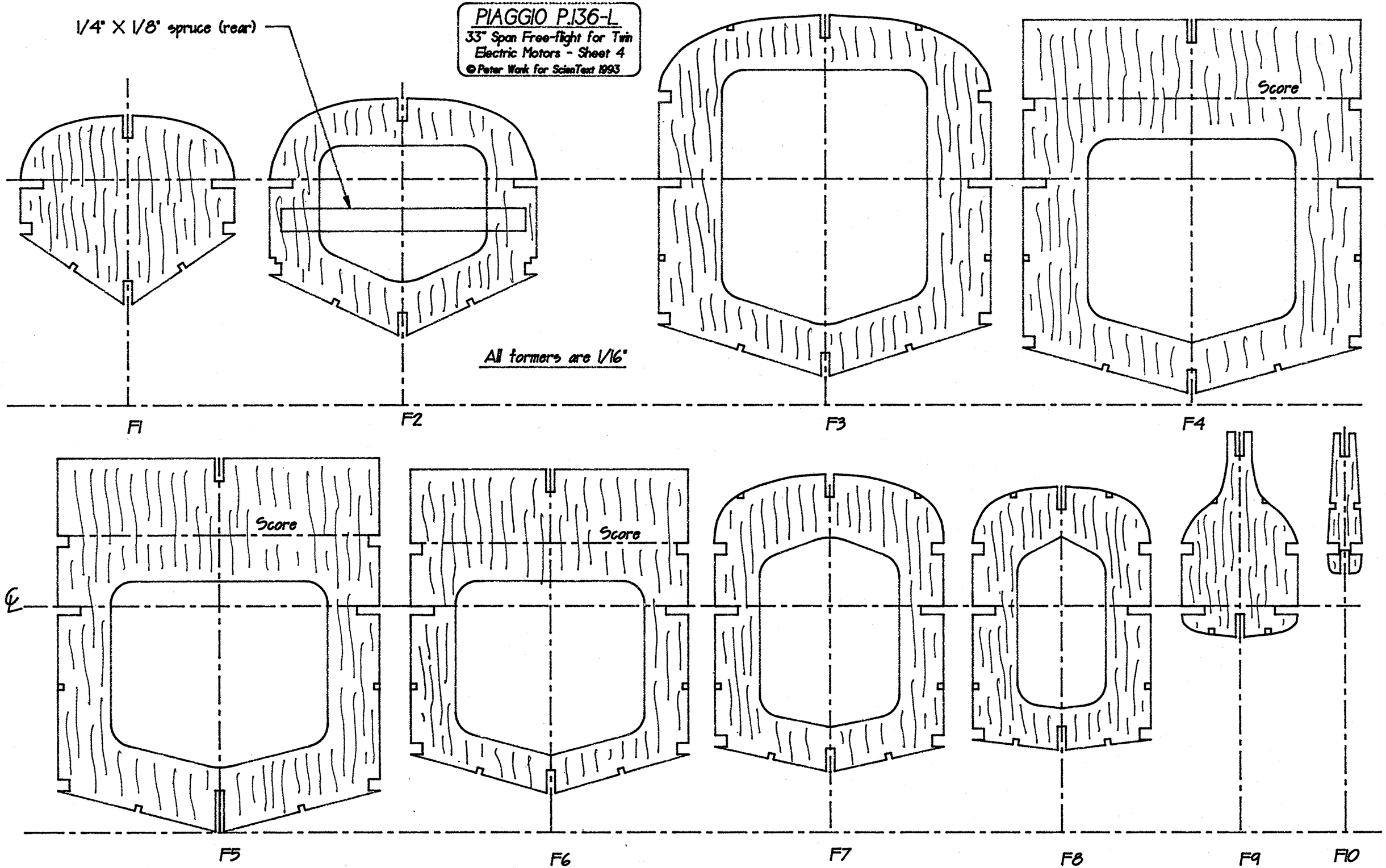

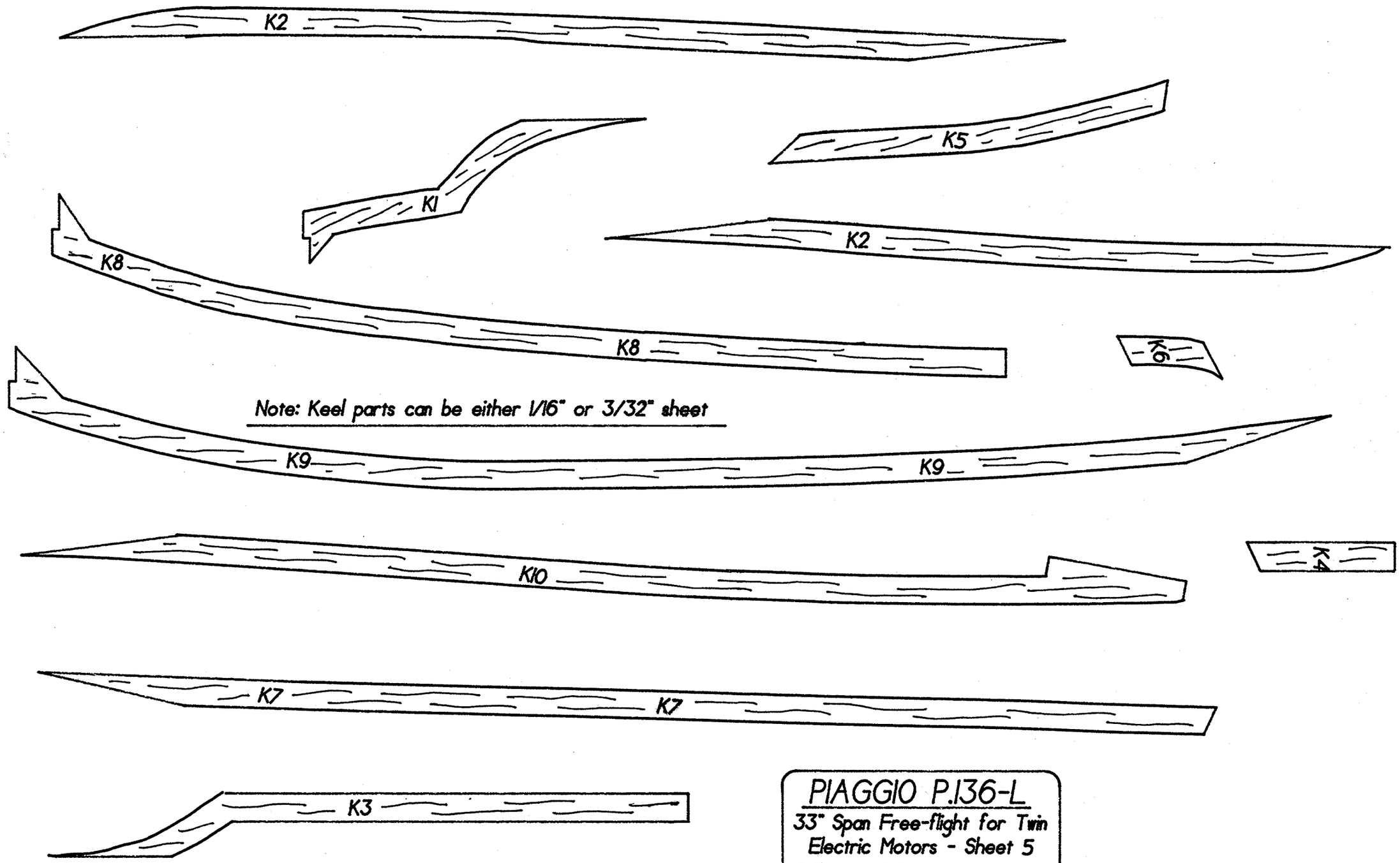

PIAGGIO P.136-L

33" Span Free-flight for Twin Electric Motors - Sheet 5

© Peter Wank for ScienText 1993

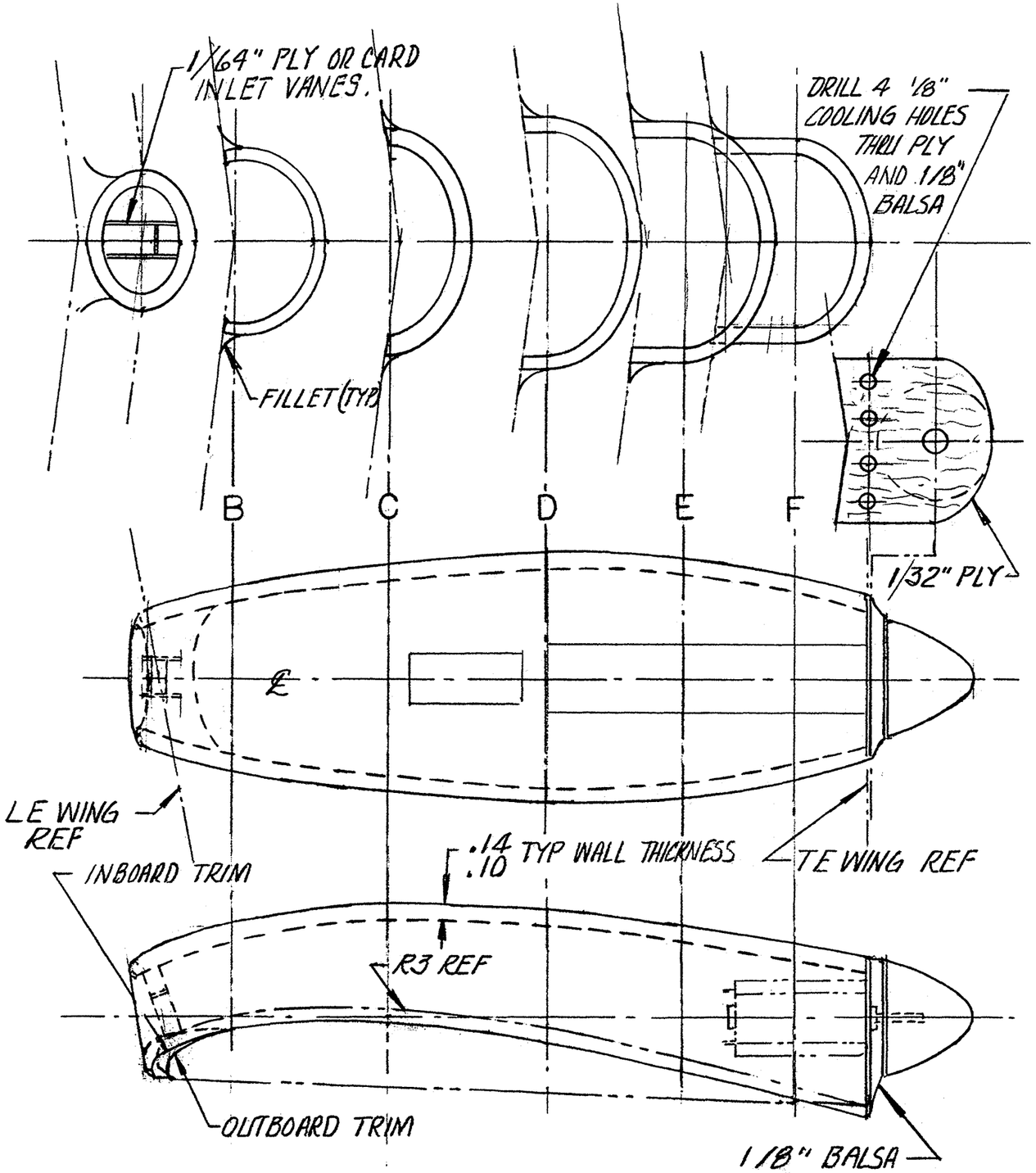

NACELLE SCALE: 1/1

SYMMETRICAL ABOUT ℄ EXCEPT FOR INBD & OUTBD LOWER TRIM.

PIAGGIO P.136-L
34" Span Free-flight for Twin Electric Motors
© Peter Wank for ScienText 1993

DRAWN BY: BOB BRECKUR

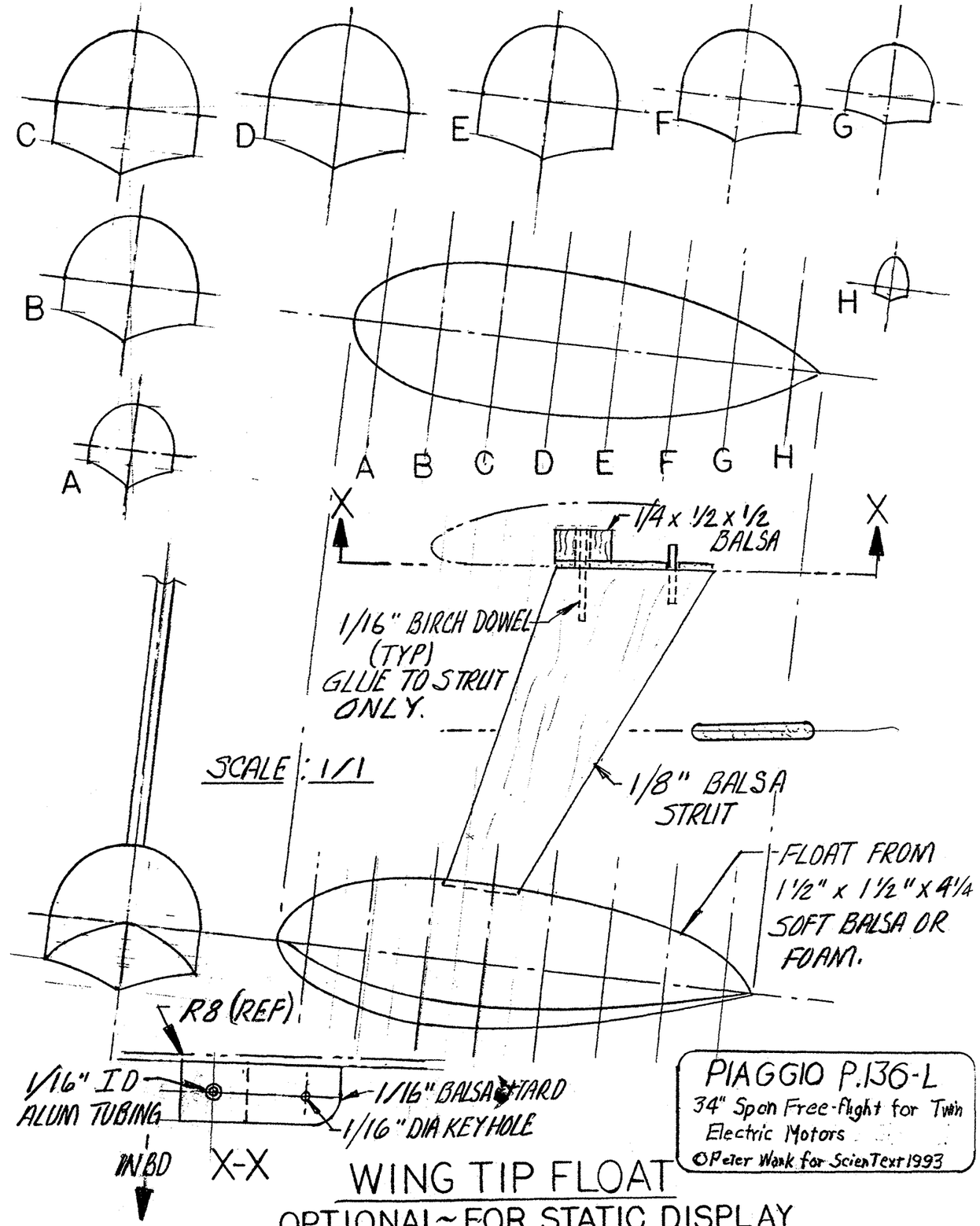

WING TIP FLOAT

OPTIONAL ~ FOR STATIC DISPLAY REMOVE BEFORE FLIGHT.

PIAGGIO P.136-L
34" Span Free-flight for Twin Electric Motors
© Peter Wank for ScienText 1993

DRAWN BY BOB BRECKUR