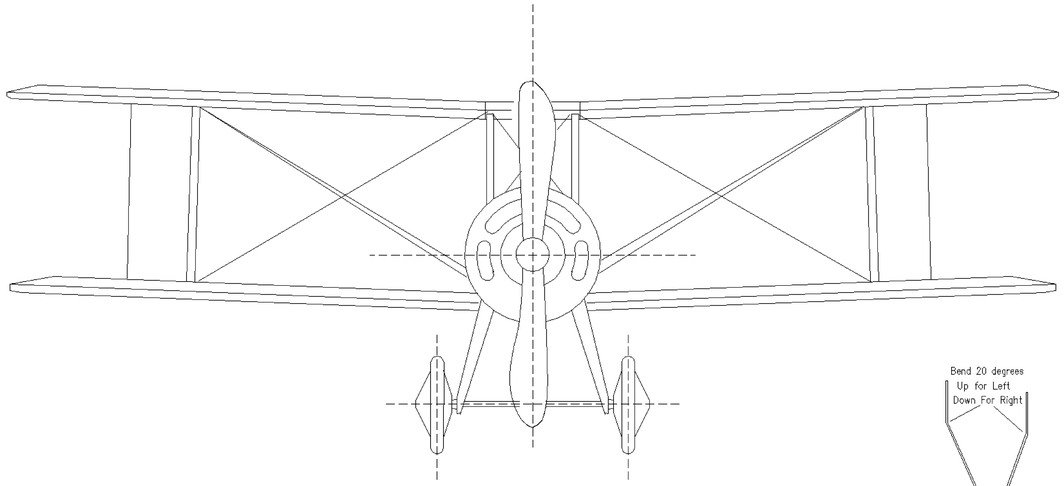

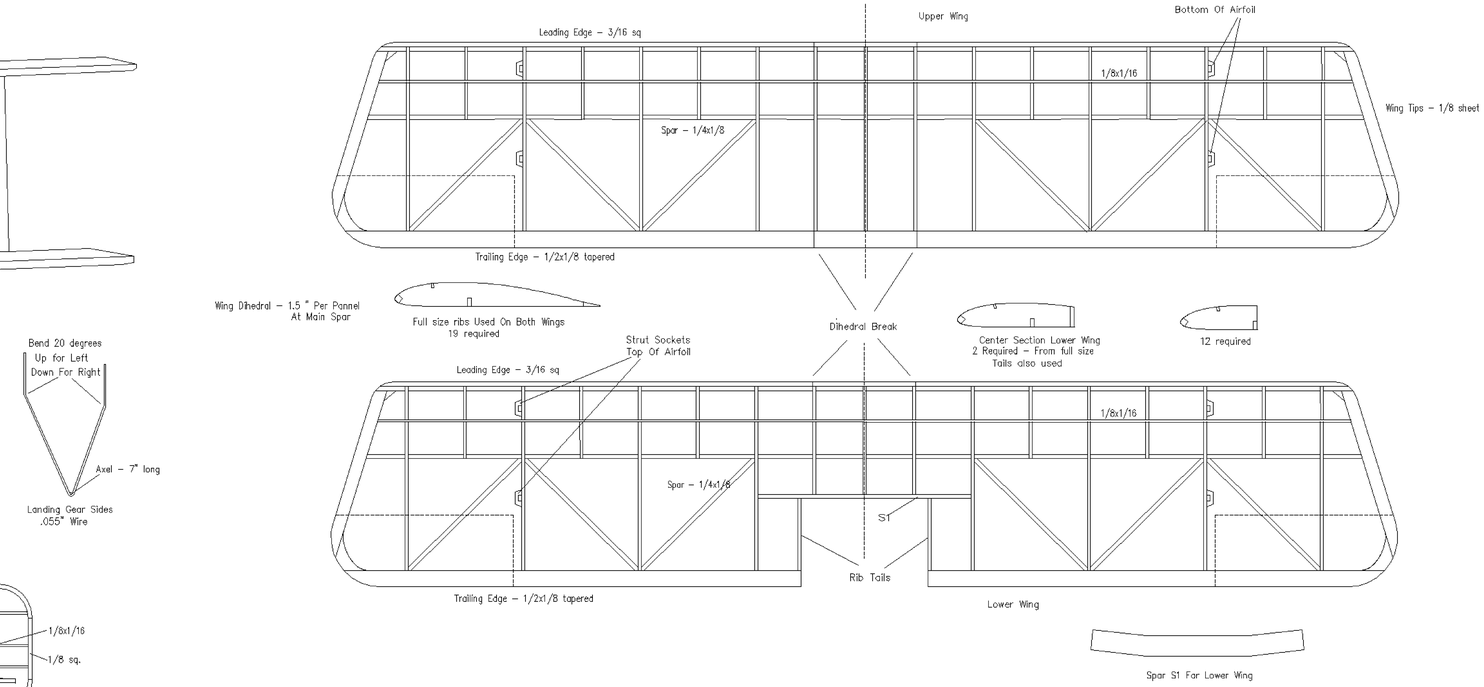

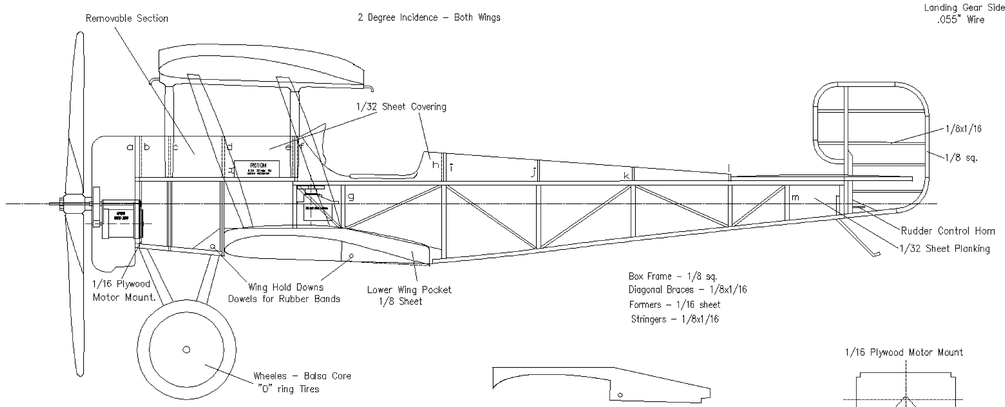

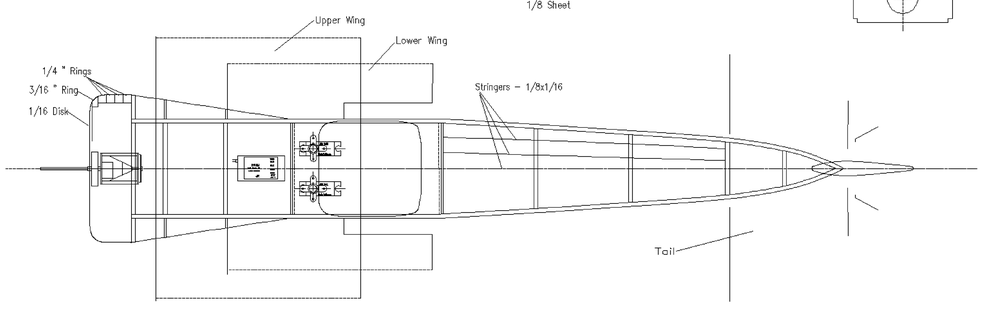

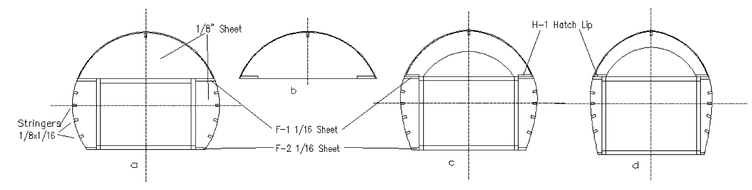

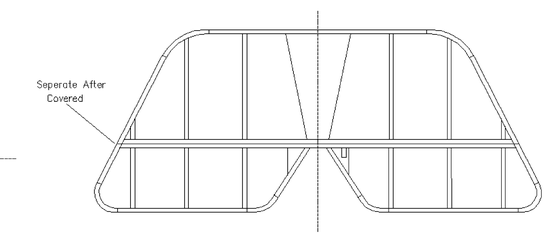

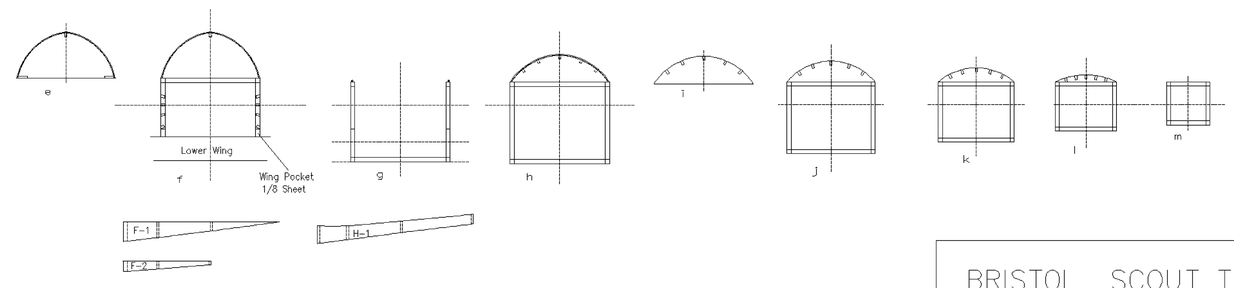

BRISTOL SCOUT Type D

Drawn By

J.C. Wilkerson

7/2001