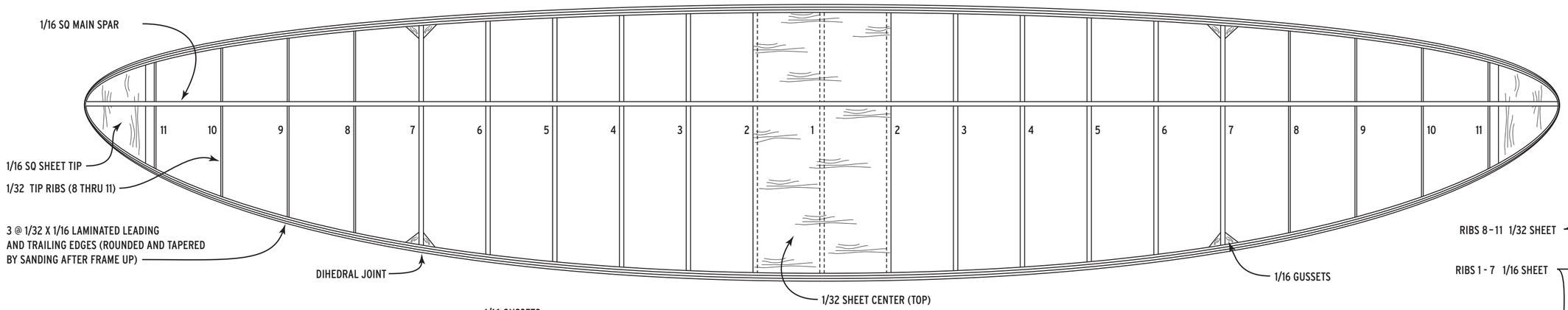

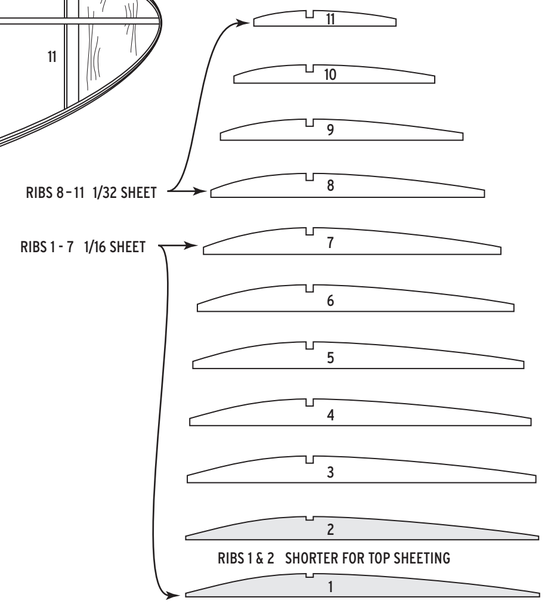

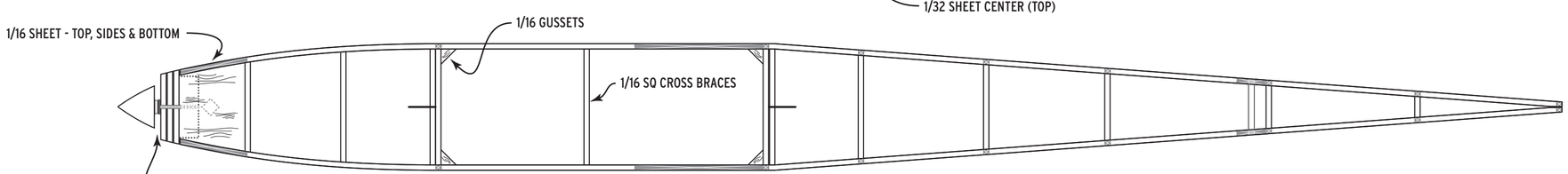

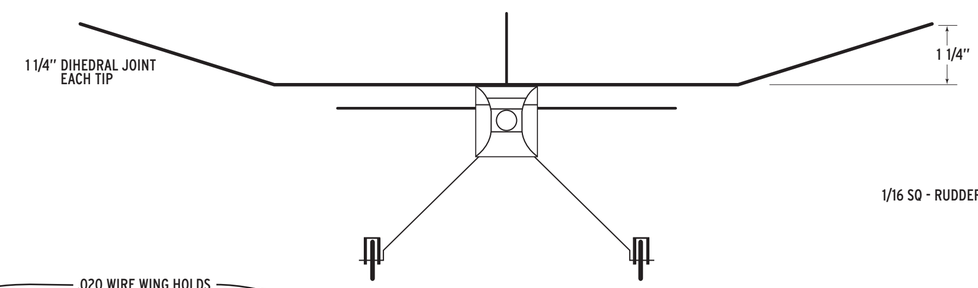

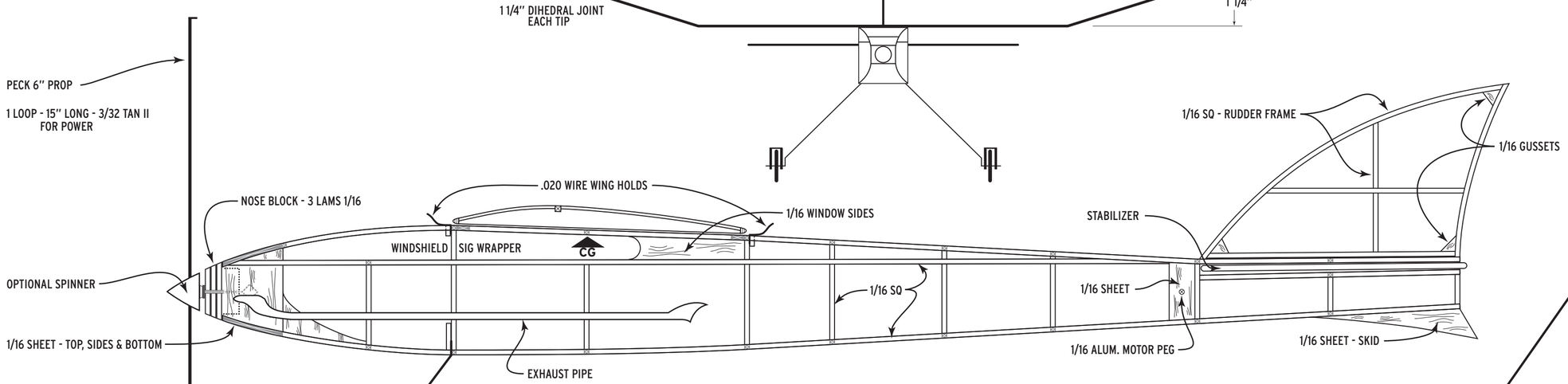

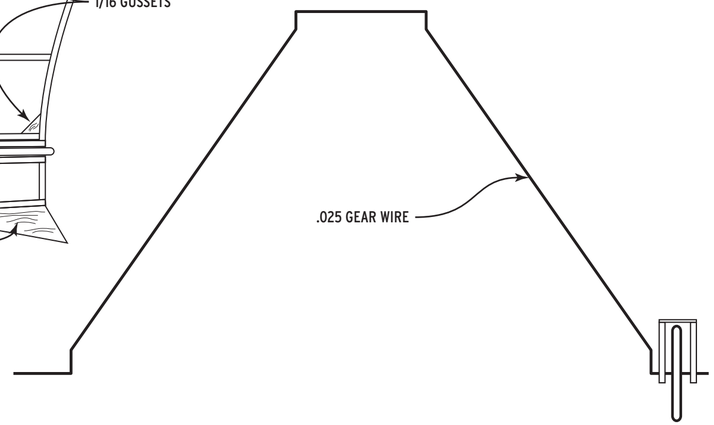

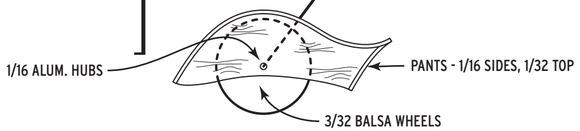

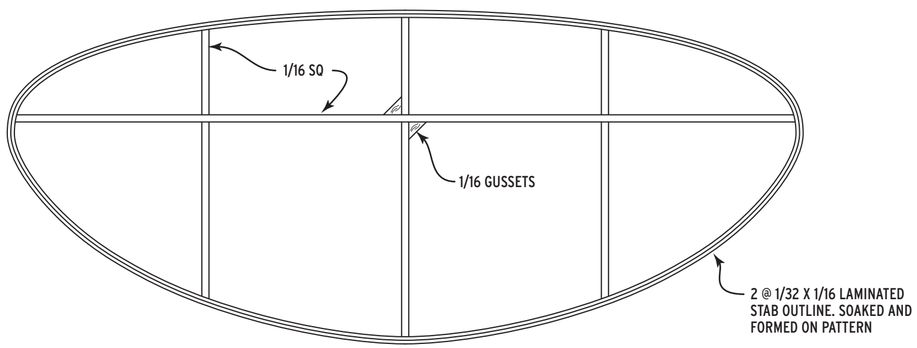

SHARKIES MACHINE

EMBRYO ENDURANCE

17 1/2" SPAN

©2002, BRUCE FEAVER