FROG

"CESSNA BIRD DOG"

22" SPAN SCALE
RUBBER MODEL
CAT. No. 731 FK.

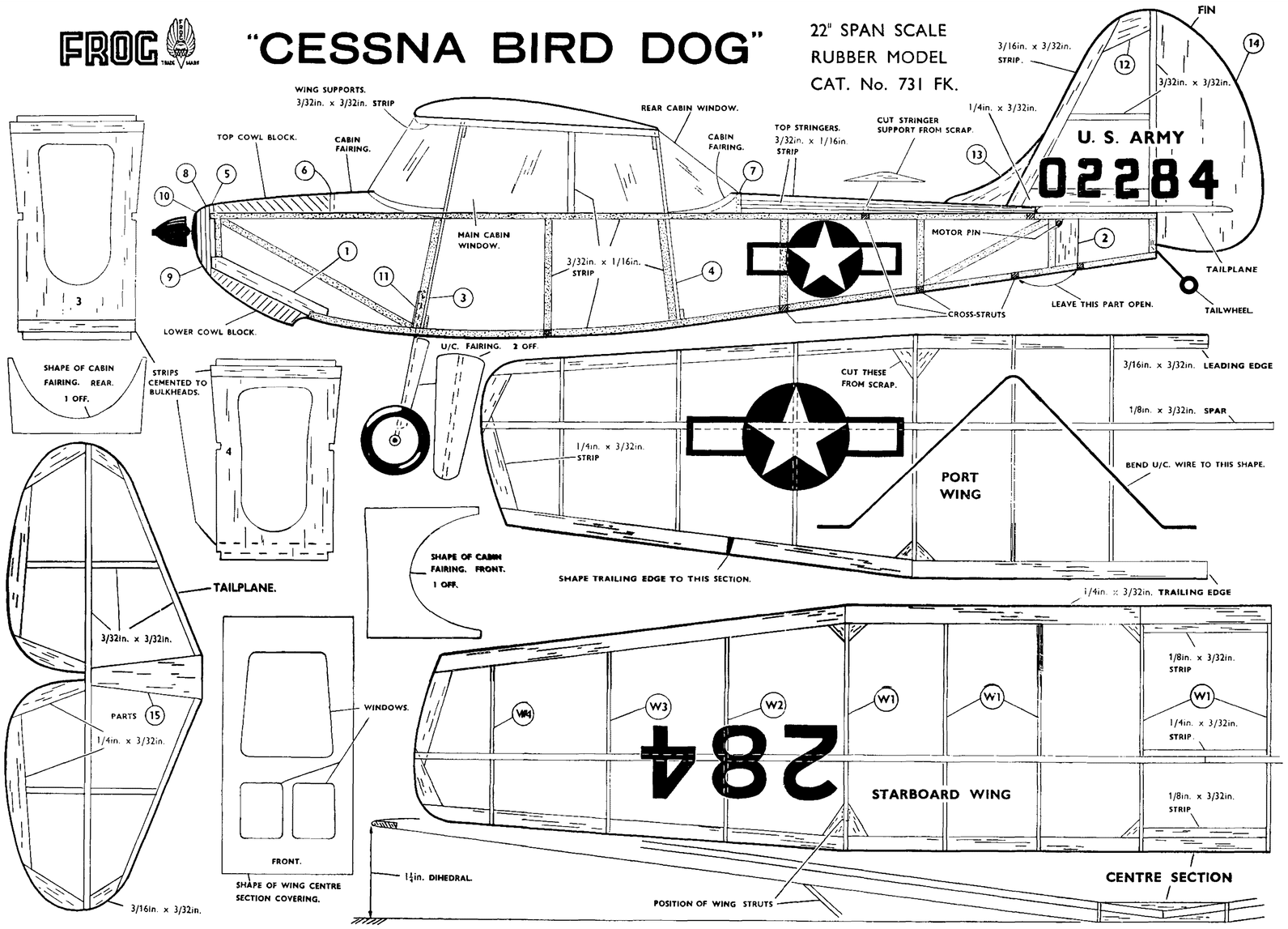

Fig. 1
COMPLETE FUSELAGE SIDE BUILT ON DRAWING

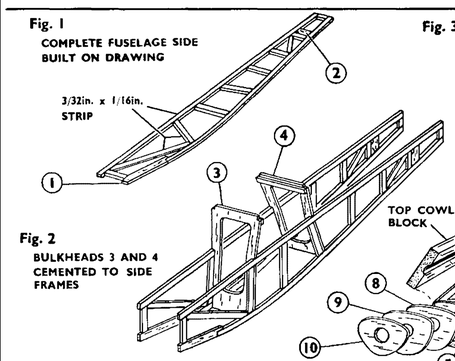

Fig. 2
BULKHEADS 3 AND 4 CEMENTED TO SIDE FRAMES

Fig. 3 BULKHEADS, COWL BLOCKS, STRINGERS AND U/C LEGS ETC ASSEMBLED

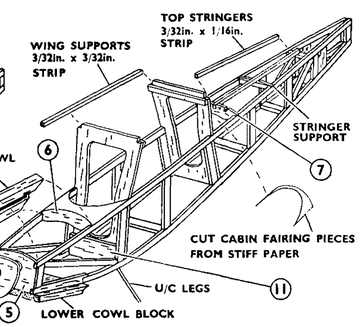

Fig. 4
CEMENT MAIN CABIN WINDOW AT CENTRE FIRST

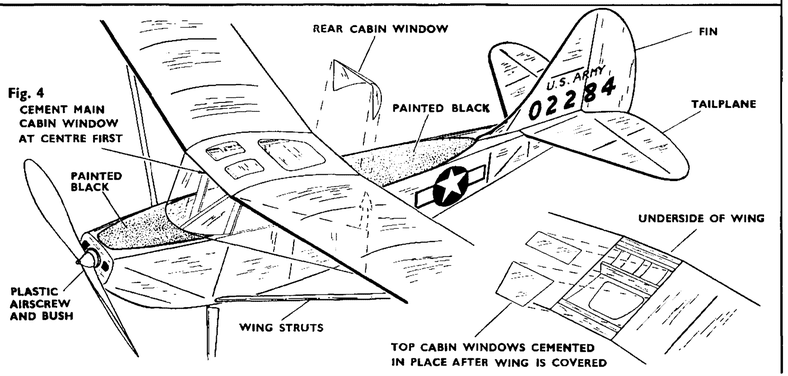

INTRODUCTION.

This model is one of the Frog Senior Scale Series, which consists of a range of models representing popular full-size light aircraft, all approximately 22in. span.

They embody very simple and quick constructional methods, all main parts being ready-cut to shape, and only require cementing together.

To ensure a satisfactory job, study the plan and check the parts with it before commencing.

Cement and dope are not included in this kit, but they can be bought at any model shop. Use quick-drying balsa cement such as Frog Universal. You will also need a balsa-cutting knife or a razor blade, and a few pins.

When you have built this model, remember there are many others in this series equally attractive.

BUILDING INSTRUCTIONS.

FUSELAGE.

Start by pinning parts 1 and 2 to the drawing and build the side-frame structure around them, using the 3/32in. x 1/16in. strips supplied, as shown in Fig. 1. Cut two sets of strips, and build the second side over the first with a piece of tracing paper between them. This ensures that they are identical. While these are setting, cement strips of spare sheet balsa to bulkheads 3 and 4. Cement these bulkheads to the side frames, see Fig. 2. When these have set, cement the rear ends of the fuselage together, and assemble bulkheads 5, 6 and 7. Cut the lower cowl-block to length and cement it to the fuselage. Then fix the nose pieces 8, 9 and 10, to bulkhead 5.

Cut the 7 cross-struts to length from 3/32in. x 1/16in. strip, and cement them in the positions shown on the side view drawing. The stringer support piece is cut from scrap sheet balsa, and cemented in place. Cut three top stringers to length using 3/32in. x 1/16in. strip and cement them in position between bulkhead 7 and the rear cross-strut as shown in Fig. 3. The wing supports are made from 3/32in. x 3/32in. strip cut to the length shown on side view drawing, and cemented in place. Bend the undercarriage wire to the shape shown on the drawing and cement it in place in front of bulkhead 3, with the piece 11 cemented against the wire to hold it in place. Cut the cabin fairing pieces from stiff paper to the shapes shown on the drawing, and cement them in place over bulkheads 6 and 7.

Sandpaper a groove in the top cowl block as shown in Fig. 3, then cut it to length and cement it in position. Shape it with a sharp knife and sandpaper the whole structure smooth.

Cut two undercarriage fairings to the shape shown on the drawing and cement them in place. Fit the wheels in place, and bend over the ends of the wire, or cement small paper washers onto the axles to hold them on.

TAILPLANE AND FIN.

Cement the two parts 15 together and pin them to the drawing; construct the tailplane round them using 3/32in. x 3/32in. strip for the leading edge, spar, etc., and 1/4in. x 3/32in. strip for the trailing edge. The fin is constructed in the same manner. When these have set, remove them from the drawing, shape the edges, and sandpaper them smooth. These parts are to be covered before they are assembled.

The tailwheel assembly is made from a 1in. pin and a piece of spare sheet balsa cut to form a wheel. Cut the head off the pin, bend it to shape, attach the wheel and cement it to the fuselage.

WING ASSEMBLY.

This is built over the plan in three parts, the port wing, starboard wing and centre section. Build the two half-wings first. Cut the leading and trailing edges to length from the strips supplied and lay them over the drawing, holding them in place with pins. Next cut the tip pieces to shape from 1/4in. x 3/32in. strip and cement them in place, followed by three ribs W1 and ribs W2, W3 and W4. The spars are then cut to length and fixed in place in the rib slots and to the tip pieces. When they have set, remove the wings from the drawing and build the centre section. Pin down the leading and trailing edges, and cement the ribs W1, then cut two strips of 1/8in. x 3/32in. balsa to length and cement them in place against the leading and trailing edges. Replace the starboard wing on the drawing and cement it to the centre-section with the tips raised 1¼in.; do the same with the port wing, and add a piece of 1/4in. x 3/32in. strip cemented behind the spars.

The gussets are made from scrap sheet balsa and cemented in place. When it has set, remove the whole structure from the drawing and sandpaper the trailing edge and tips to shape, and smooth down the whole structure.

COVERING.

Cover the model with the paper supplied, in the following order—fuselage top and bottom, then sides. Wing and tailplane undersurfaces, then top, then the fin. Use office paste or dope for fixing it. Cut the paper to the approximate shapes first, leaving a 1/4in. margin all round. Apply paste to the edges of the frame, then lay the tissue over it and pull gently all round. Do not attempt to get it drum tight, but aim at getting an even surface, with no deep wrinkles. The water-spraying and doping will tighten it.

Before doping, lightly brush or spray each part with water and leave to dry. Spray half a wing at a time, and pin it down to a flat board to prevent warping whilst it is drying. Do the same with the tailplane and the fin. When they are completely dry, give each part a coat of dope, and pin down the wing, tailplane and fin again, when the dope begins to dry.

Cement the tailplane and fin in position on the fuselage, making sure they are square with it when viewed from either end. Cement the top cabin windows in place inside the wing centre-section as shown in Fig. 4. (Use thin cellatoid such as that used on cigarette packets). Well cement the wing in position, and cement the main cabin window in place, holding it, until it has set; then fix the rear cabin window. Cut the two wing struts 5¼in. long from 3/16in. x 3/32in. strip. Shape them to an oblong section, and bevel the ends to fit against the fuselage and wing. Cement them in place at bulkhead 3 on the fuselage and on the wing where indicated on the drawing.

DECORATION.

One or two thin coats of paint are required, preferably sprayed on. If too much paint is applied, the model will be too heavy and will not fly. Paint the whole model light grey, with anti-dazzle strips in front and behind the cabin painted black.

All markings are transfers which can be obtained from most model shops. The wing and fuselage markings are put on where indicated on drawing.

MOTOR.

This is composed of two 12in. elastic bands which are supplied. Lubricate them with Castor Oil or Frog Rubber Lubricant, and insert them into the fuselage with the help of a length of wire or thread. Bend a hook at one end of the wire and insert it into the front end of the fuselage. (If a thread is being used, tie a weight to one end and drop it through).

Hook the bands on to it through the opening at the rear and insert the rear motor pin (cane) through the holes in the fuselage and through the loops of elastic. Pull the bands out through the front, and hook them on to the airscrew shaft (complete with Airscrew).

The model is now complete and ready for flying. A drop of thin oil on the airscrew shaft will improve the running.

FLYING.

This model is intended to be flown out of doors, but choose a calm day for your first test.

Test-glide the model first to check the balance. Hand-launch it in a slight downward direction. If it dives to the ground, glue a small weight in the rear end of the fuselage. If the model climbs steeply and stalls, add a small weight to the nose of the fuselage. A small nail or drawing pin can be pushed into the cowl block for this.

When the glide seems satisfactory, put a few turns on the motor and launch the model (into wind) if any. The turn can be adjusted by bending the fin, or by twisting the wing slightly.

Increase the turns on the motor gradually, up to a maximum of approximately 350; if the motor is not lubricated, the turns must be limited to 200. An unlubricated motor will wear and break very quickly. Stretching the elastic while winding will enable more turns to be obtained.

This model will take-off from the ground without assistance. Having wound the motor, place the model on a smooth surface, and release it directly into wind.
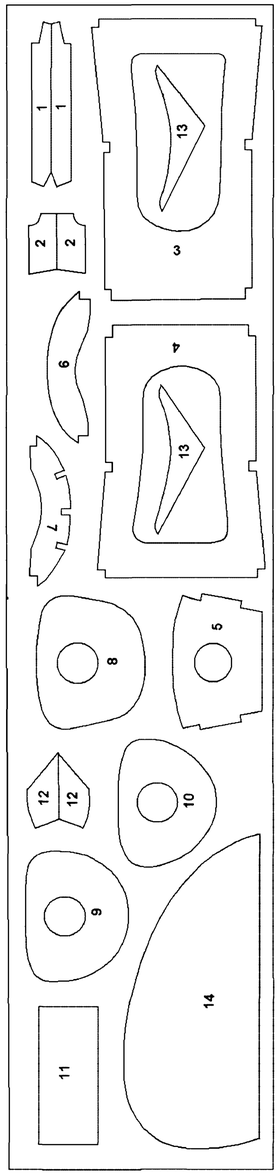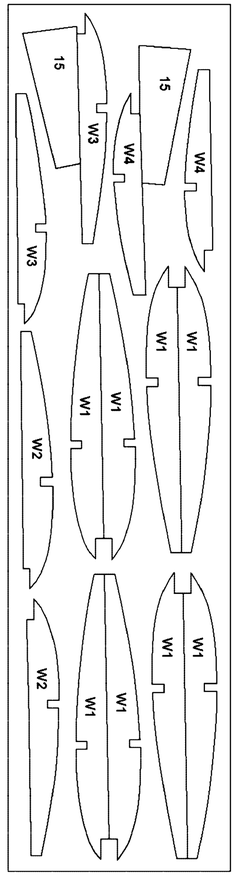
Designed and Made in England by
INTERNATIONAL MODEL AIRCRAFT LTD.
MORDEN ROAD : MERTON : LONDON, S.W.19.
Printed in England. R.S.P.