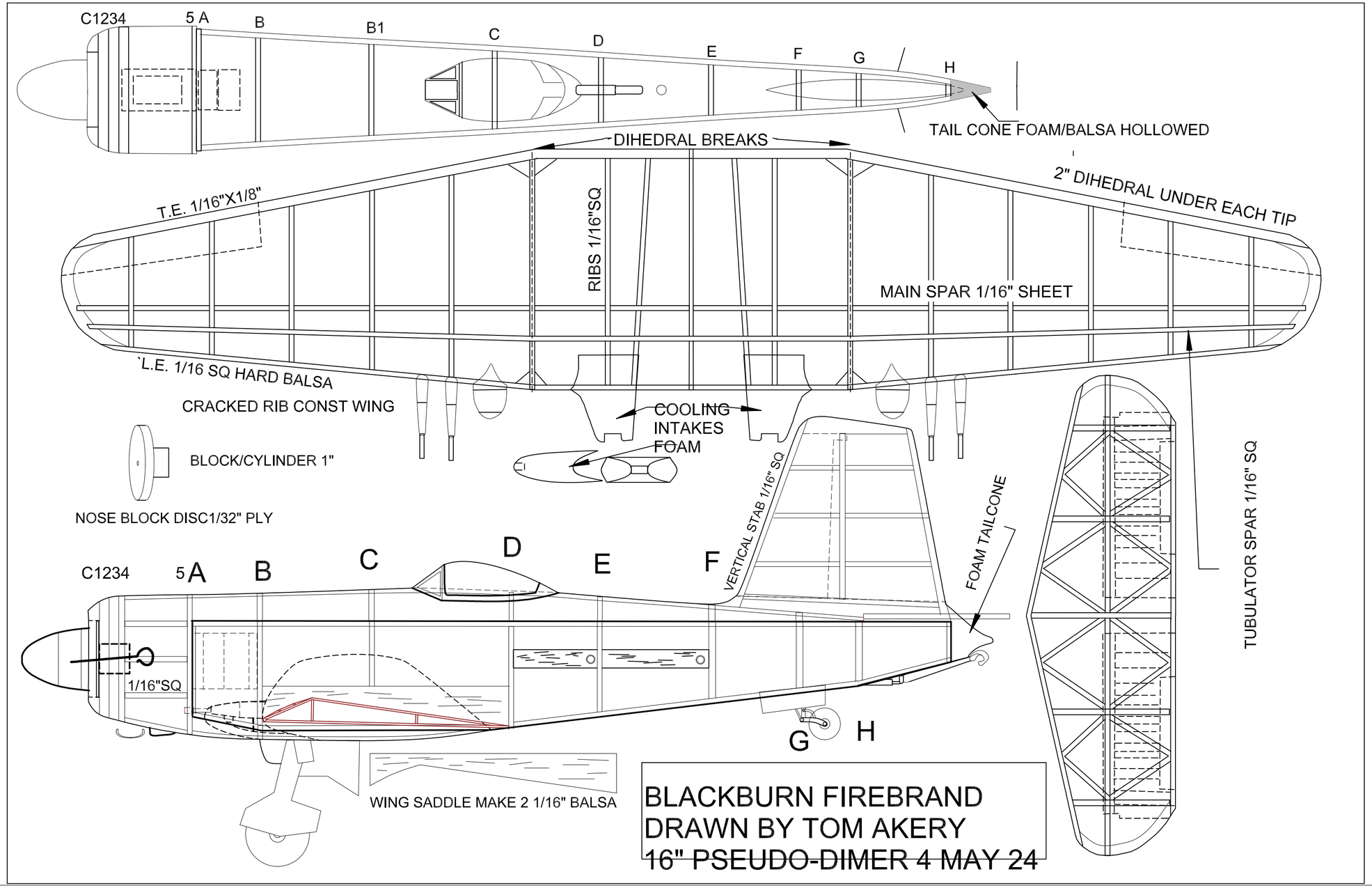
C1234
5 A
B
B1
C
D
E
F
G
H
TAIL CONE FOAM/BALSA HOLLOWED
DIHEDRAL BREAKS
2" DIHEDRAL UNDER EACH TIP
T.E. 1/16"X1/8"
RIBS 1/16"SQ
MAIN SPAR 1/16" SHEET
`L.E. 1/16 SQ HARD BALSA
CRACKED RIB CONST WING
COOLING
INTAKES
FOAM
BLOCK/CYLINDER 1"
NOSE BLOCK DISC1/32" PLY
VERTICAL STAB 1/16" SQ
FOAM TAILCONE
TUBULATOR SPAR 1/16" SQ
1/16"SQ
WING SADDLE MAKE 2 1/16" BALSA
BLACKBURN FIREBRAND
DRAWN BY TOM AKERY
~~16" PSEUDO-DIMER 4 MAY 24~~

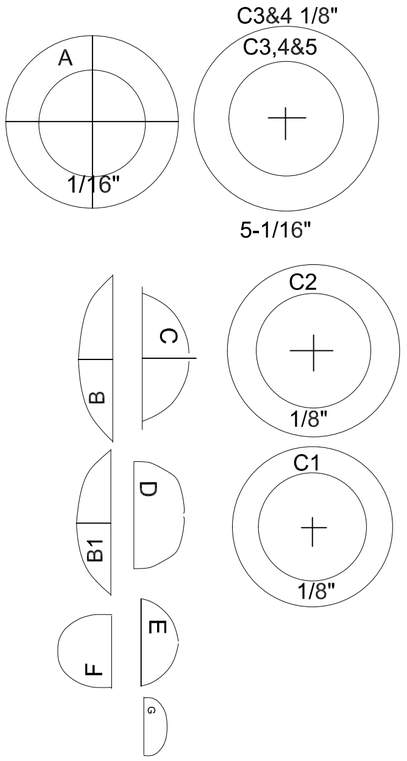
A
1/16"
C3&4 1/8"
C3,4&5
5-1/16"
C2
1/8"
C1
1/8"
B
C
B1
D
F
E
G