ASSEMBLY NOTES:
MAKE TWO FUSELAGE SIDES & ASSEMBLE WITH CROSS SPACERS.
COMPLETE NOSE PORTION WITH SHEET & SOLID BLOCK. ADD TAILWHEEL & UNDER-CARRIAGE IF DESIRED; & COVER WITH TISSUE. BUILD UP CABIN & COVER WITH CELLOPHANE. BLACK IN REAR OF CABIN CEMENT WINGS, TAILPLANE & FIN SECURELY IN POSITION. ADD LANDING SKIDS.

MAKE WINGS HALVES SEPARATELY - COVER & SECURELY CEMENT TO FUSELAGE AT CORRECT DIHEDRAL.

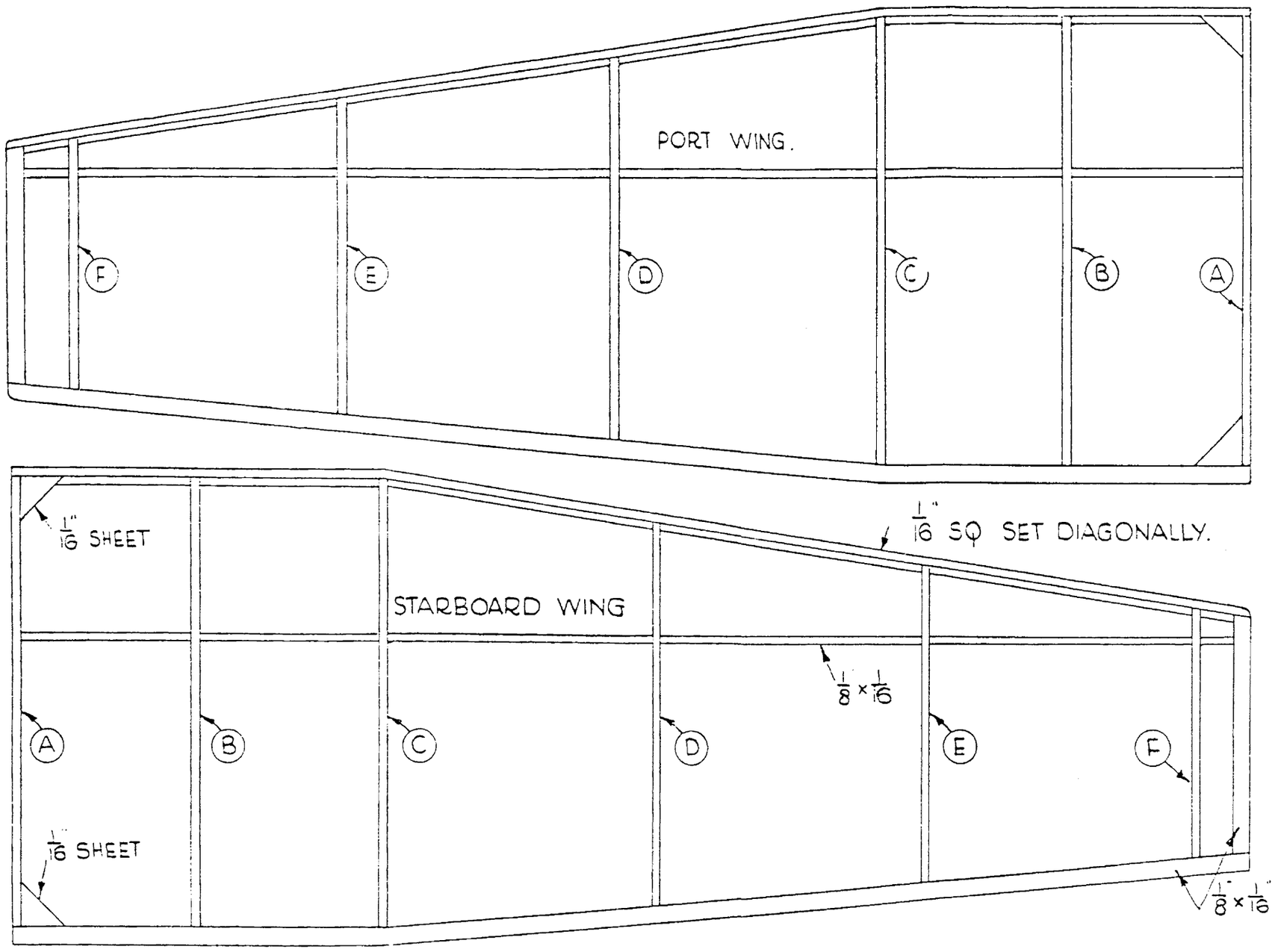





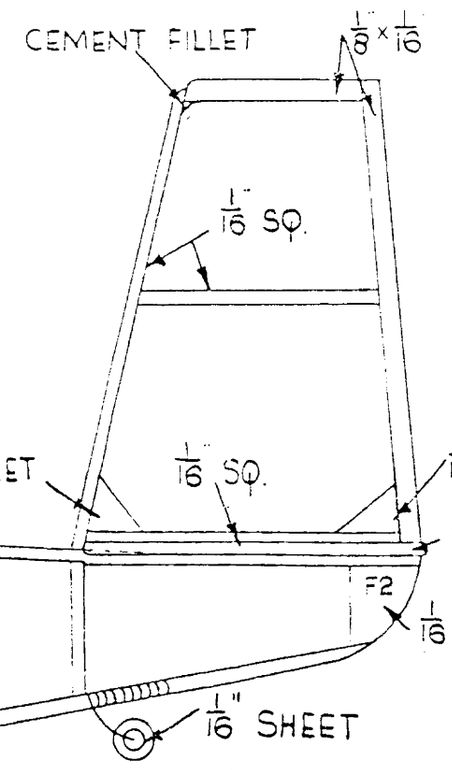


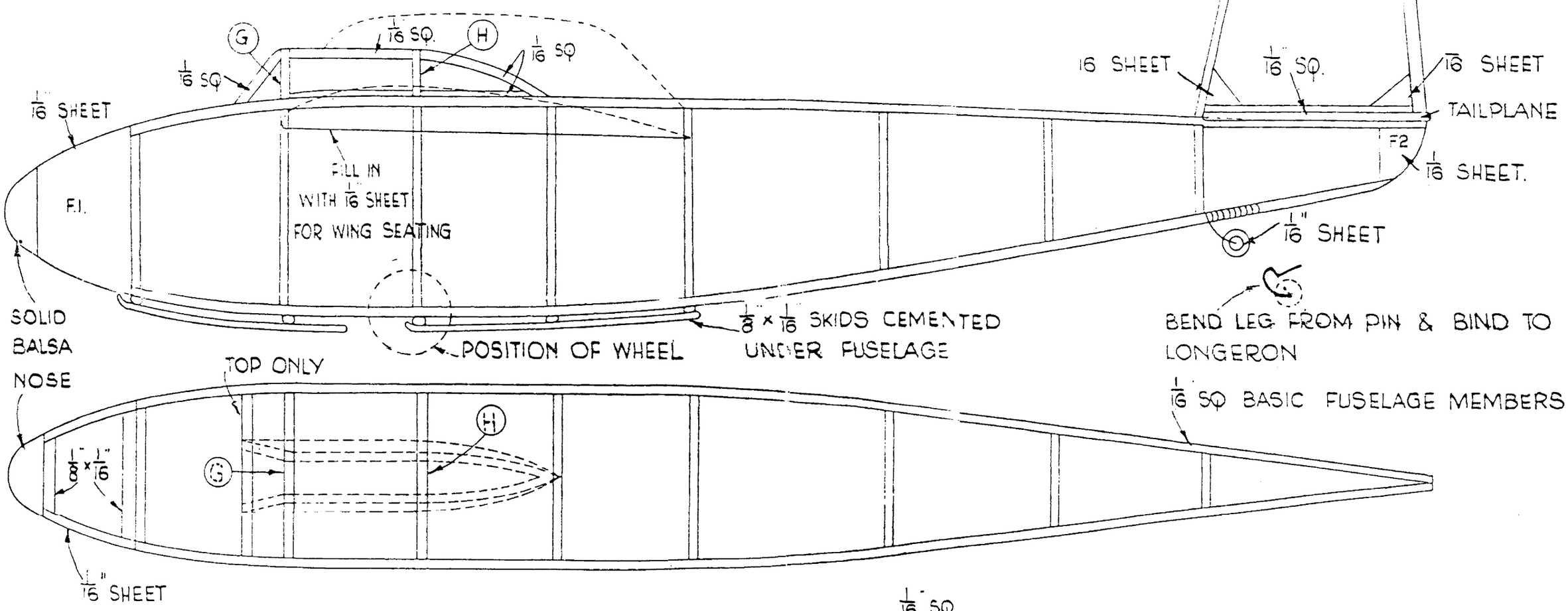


CABIN IS BUILT UP FROM 1/16 SQ AFTER CEMENTING FORMERS G & H IN PLACE ON COVERED FUSELAGE. COVER WITH CELLOPHANE.

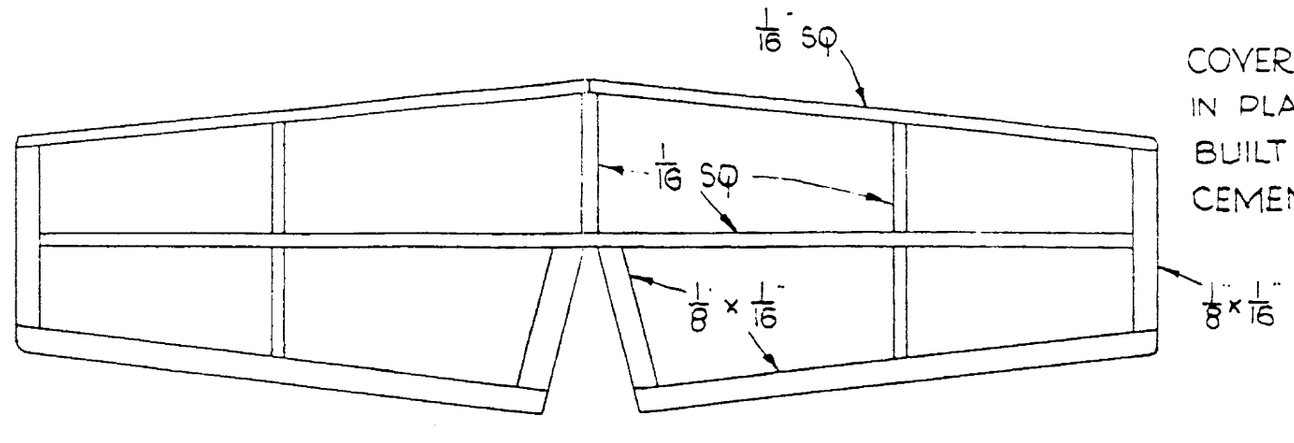


COVER TAILPLANE BEFORE CEMENTING IN PLACE ON FUSELAGE. FIN IS BUILT AS A SEPARATE UNIT & CEMENTED ON TOP OF TAILPLANE.

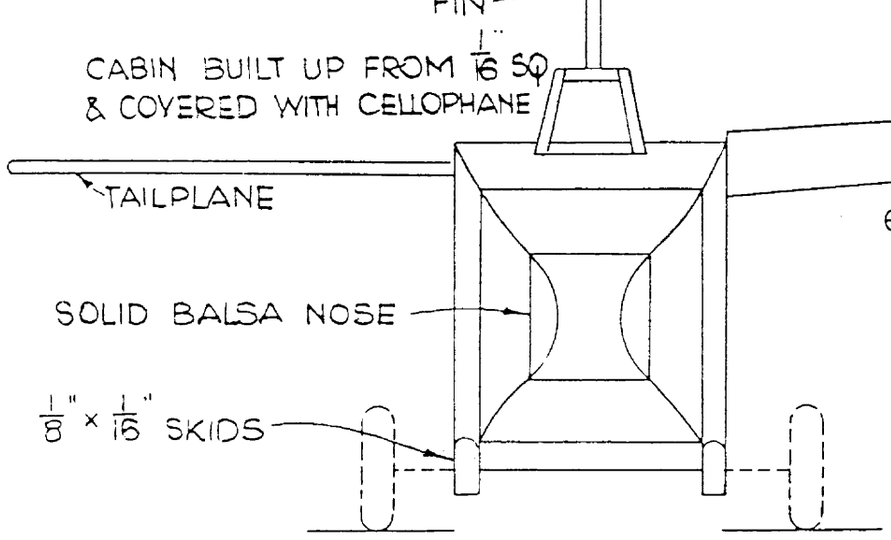


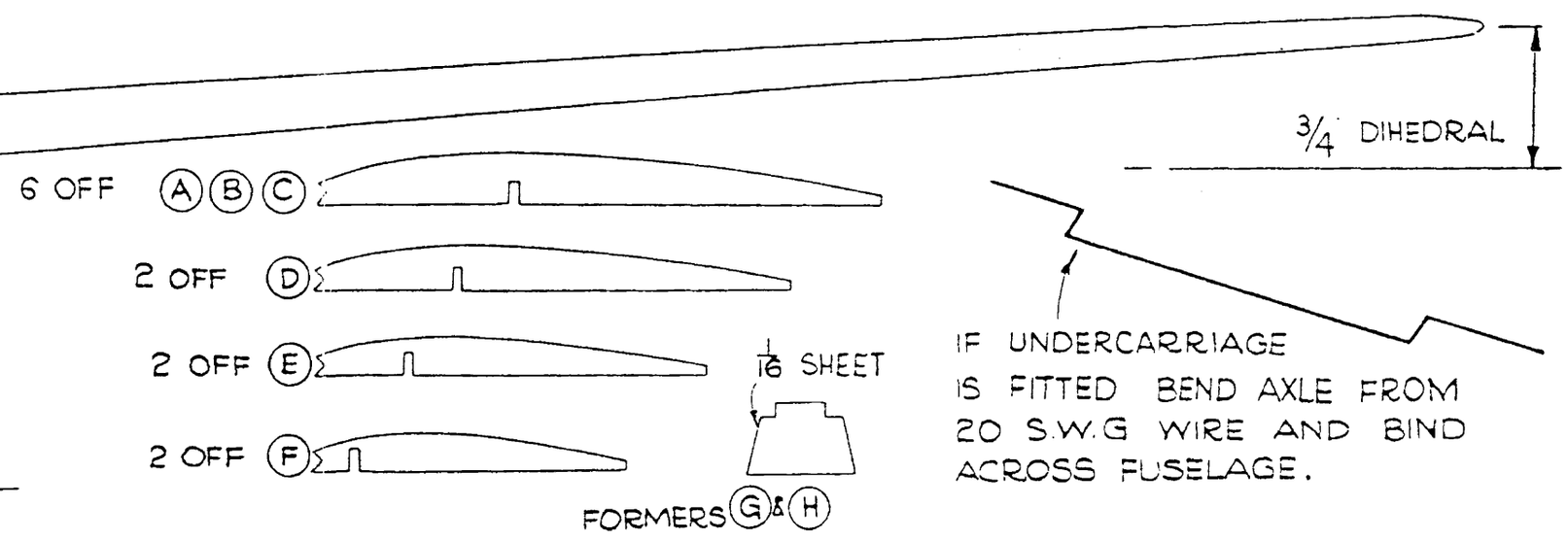


BRITISH MODEL AIRCRAFT MANFG.CO
DESIGNED BY A.M. COLBRIDGE.
TRACED BY J.E.M. 1/12/44.
CHECKED BY R.H.W. 7/12/44.
PASSED FOR ISSUE: H.W.P. 10/12/44.

SKYLEADA FLYING SCALE GLIDER SERIES 20" WING SPAN.

# GENERAL AIRCRAFT HAMILCAR I.

BRITISH MODEL AIRCRAFT MANG CO
SPAN: 20"
LENGTH O/A 12"
APPROX FLYING WEIGHT
11/16 OZ.